CENTER DRILLS

DV303 SERIES
DV333 SERIES

HSS-E, CENTER DRILLS / FORM A

- HSS-EX, ZENTRIERBOHRER / FORM A
- Forets HSS-EX à centrer / Forme A
- PUNTE A CENTRARE PER TORNI IN HSS-EX / FORMA A

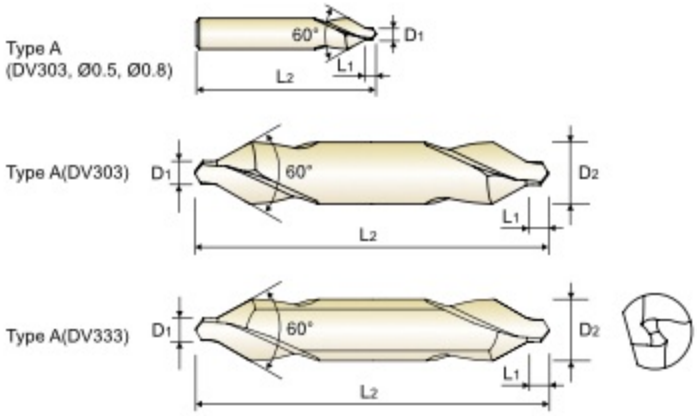

DIN 333 | HSS-E | h8 | k12 | 120° | Bright

p.A297

Recommended ToolHolder	PlainShank	Page
	NC DRILL CHUCKS, OTHER TOOLHOLDERS	D247-256
	ER COLLETCHUCK	D73-115

FORM A (60°)

EDP No.	Drill Diameter D1	Shank Diameter D2	Pilot Length L1	Overall Length L2
DV303005	0.5	3.15	0.8	25
DV303008	0.8	3.15	1.1	25
DV303010	1.0	3.15	1.3	31.5
DV303912	1.25	3.15	1.6	31.5
DV303016	1.6	4	2	35.5
DV303020	2.0	5	2.5	40
DV303025	2.5	6.3	3.1	45
DV303931	3.15	8	3.9	50
DV303040	4.0	10	5	56
DV303050	5.0	12.5	6.3	63
DV303063	6.3	16	8	71

▶ Under 1.0mm : Single End

FORM A (60°), FLAT

Unit : mm

EDP No.	Drill Diameter D1	Shank Diameter D2	Pilot Length L1	Overall Length L2
DV333016	1.6	4	2	35.5
DV333020	2.0	5	2.5	40
DV333025	2.5	6.3	3.1	45
DV333931	3.15	8	3.9	50
DV333040	4.0	10	5	56
DV333050	5.0	12.5	6.3	63
DV333063	6.3	16	8	71

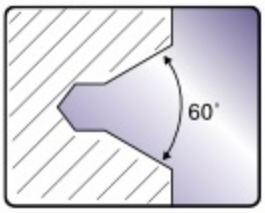

◎ : Excellent ○ : Good

ISO	P											M			K					
Material Description	Non-alloy steel					Low alloy steel				High alloyed steel, and tool steel		Stainless steel			Grey cast iron		Nodular cast iron		Malleable cast iron	
VDI 3323	1	2	3	4	5	6	7	8	9	10	11	12	13	14	15	16	17	18	19	20
HRc		13	25	28	32	10	29	32	38	15	35	15	23	10	10	26	3	25		21
HB	125	190	250	270	300	180	275	300	350	200	325	200	240	180	180	260	160	250	130	230
Recommended	◎	◎	○			◎	○					○			◎	○	○		○	

ISO	N										S							H			
Material Description	Aluminum-wrought alloy		Aluminum-cast, alloyed			Copper and Copper Alloys (Bronze / Brass)			Non Metallic Materials		Heat Resistant Super Alloys					Titanium Alloys		Hardened steel		Chilled Cast Iron	Hardened Cast Iron
VDI 3323	21	22	23	24	25	26	27	28	29	30	31	32	33	34	35	36	37	38	39	40	41
HRc											15	30	25	38	34			55	60	42	55
HB	60	100	75	90	130	110	90	100			200	280	250	350	320	400Rm	1050Rm	550	630	400	550
Recommended																					