Horizontal toggle clamp

No. 6833

Horizontal toggle clamp with red handle

with open clamping arm and angle base.
Galvanized and passivated. Rivets made of stainless steel, which, for sizes 2 and 3, run in hardened bushings. Bearings are pre-lubricated.
Ergonomic, oil-resistant handle with large grip surface and soft components. Lock washer for the thrust bolt at the end of the clamping arm.
Complete with tempered, galvanized clamping screw no. 6890.

Order no.	Size	F1 [kN]	F2 [kN]	Clamping screw	Weight [g]
93179	1	0,8	1,1	M5x30	170
93328	2	1,0	1,2	M6x35	245
93336	3	1,8	2,5	M8x45	390
93542	4	2,0	3,0	M8x65	730

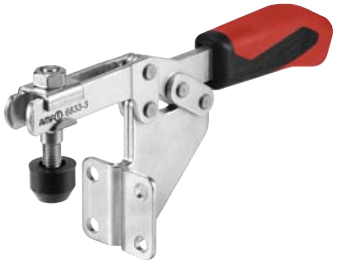

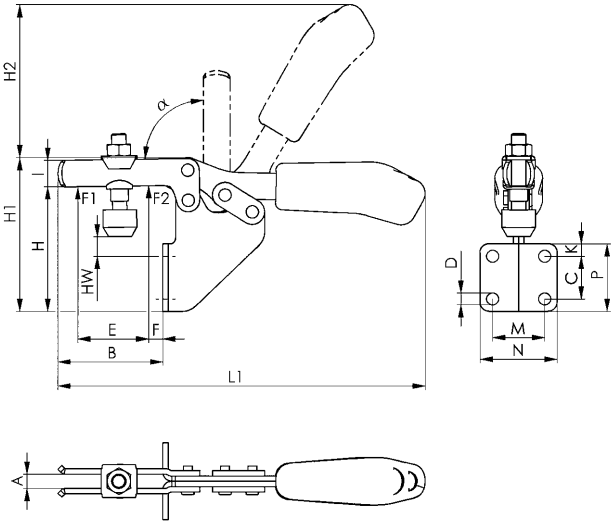

Dimensions:

Size	A	B	C	D	E	F	H	H1	H2	HW min.	HW max.	I	K	L1	M	N	P	α
1	5,0	32	13,5	5,2	18,5	4,0	57	68,0	49	14	20,0	10,0	8	120	19,0	31,0	28	90°
2	6,2	52	20,0	5,6	32,0	10,5	73	94,0	68	22	29,5	13,2	6	162	25,5	37,0	32	90°
3	8,0	59	24,0	6,8	37,0	6,5	70	86,5	86	5	16,0	15,0	7	206	28,5	42,5	38	90°
4	10,0	93	32,0	8,5	63,0	15,0	102	133,0	120	11	40,0	20,0	40	282	32,0	52,0	82	90°