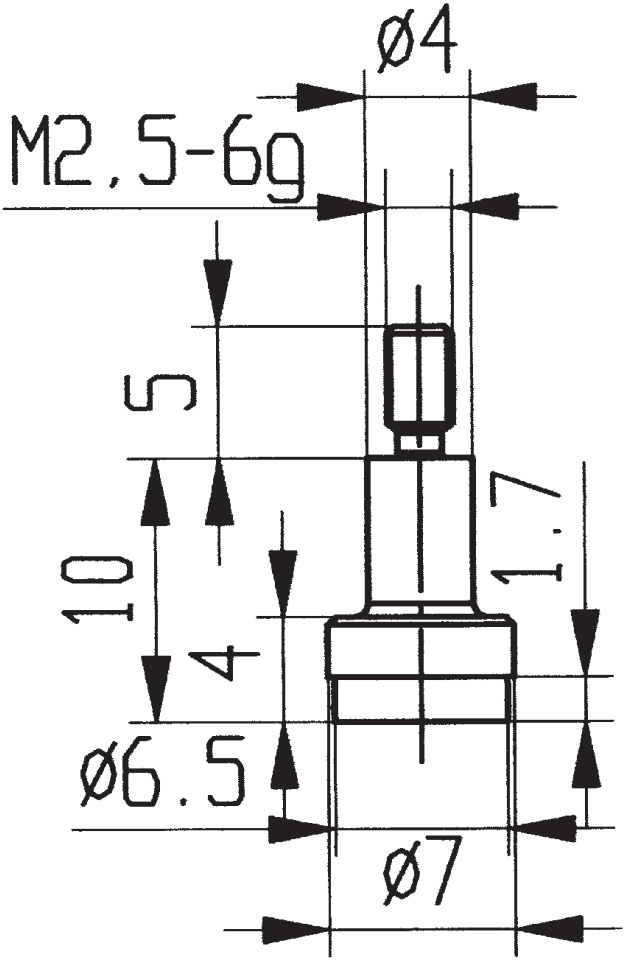

573/102 H