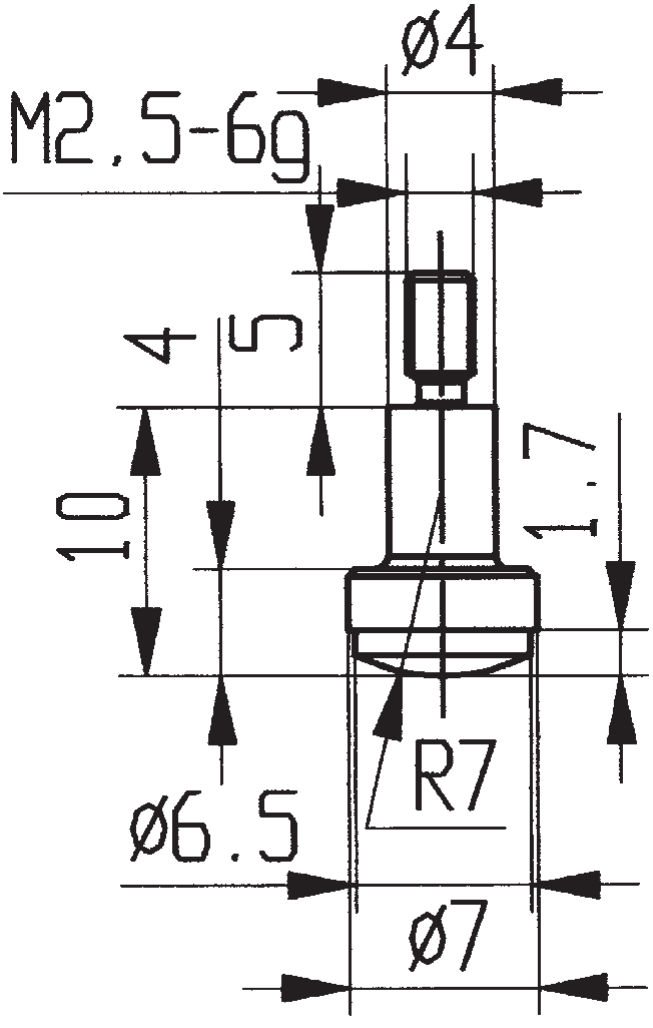

573/108 H