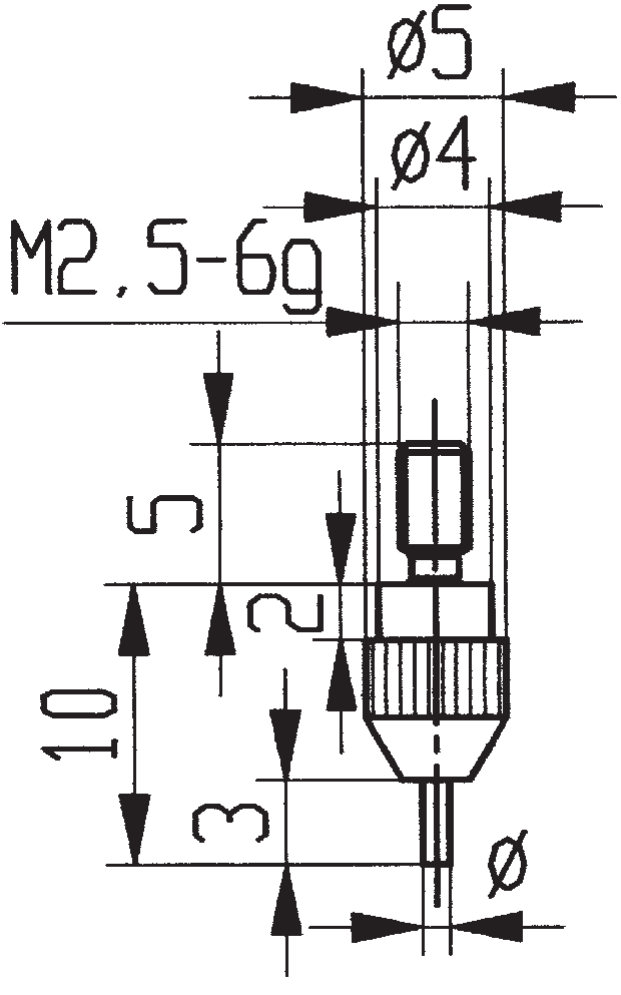

573/112 H