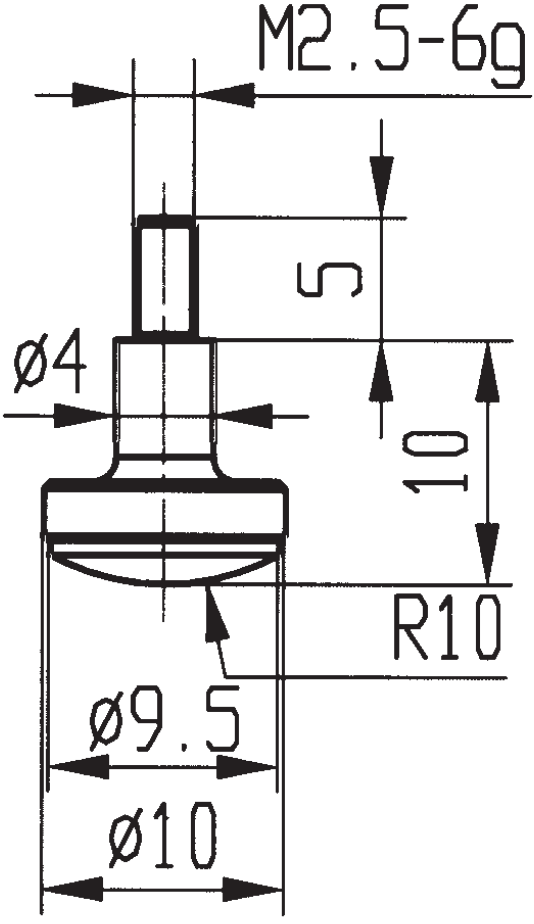

573/12-10 H