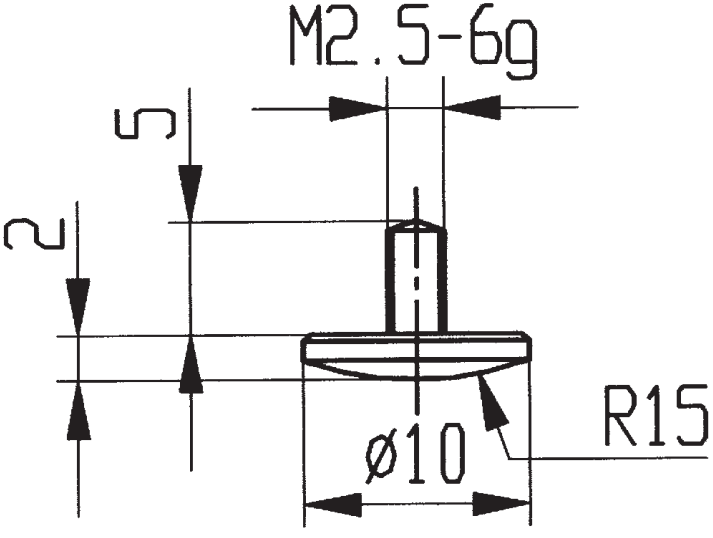

573/12