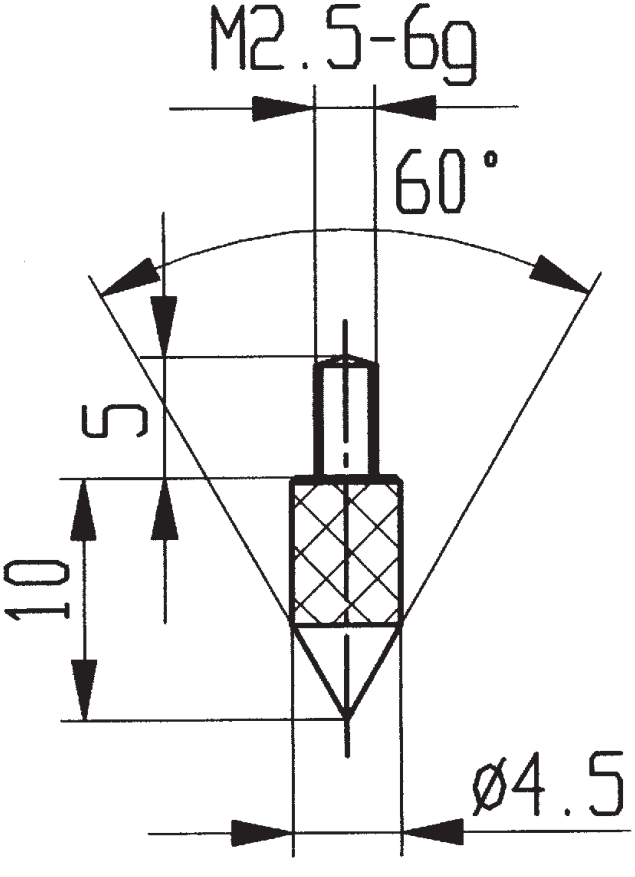

573/13-60