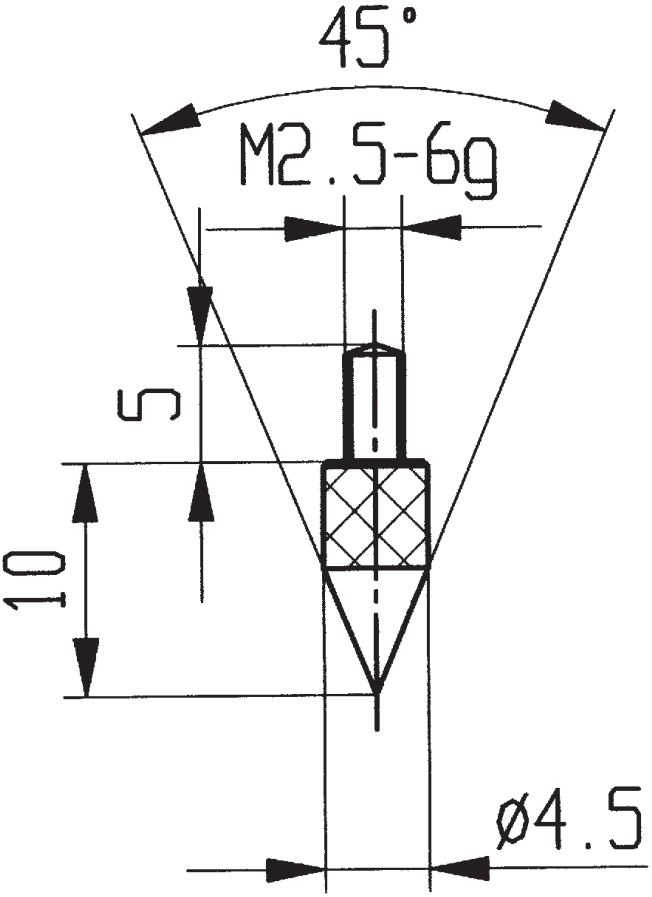

573/13 H