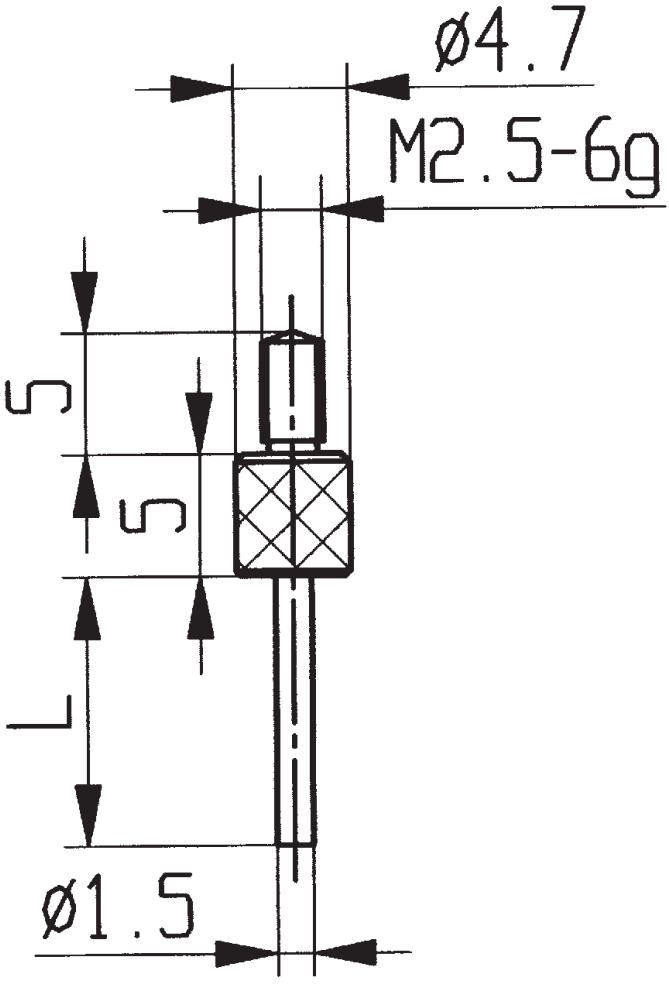

L = 15, 20, 25, 30, 35, 40, 50 mm

573/14 L