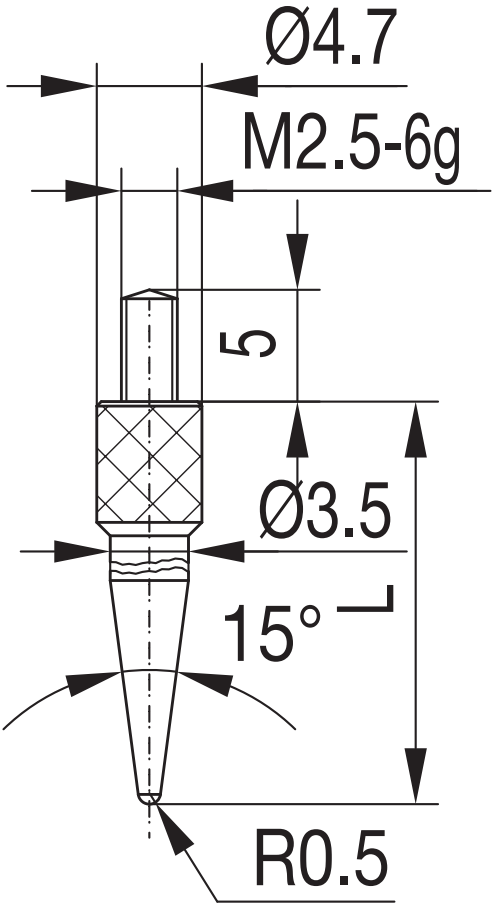

L = 5, 10, 15, 20, 30 mm

573/15 L