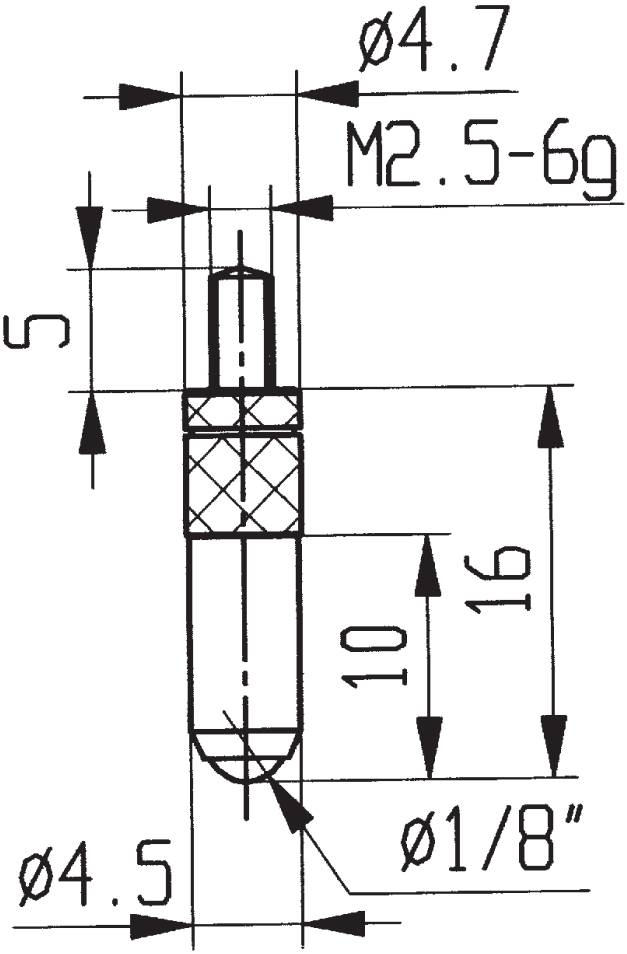

573/16 H