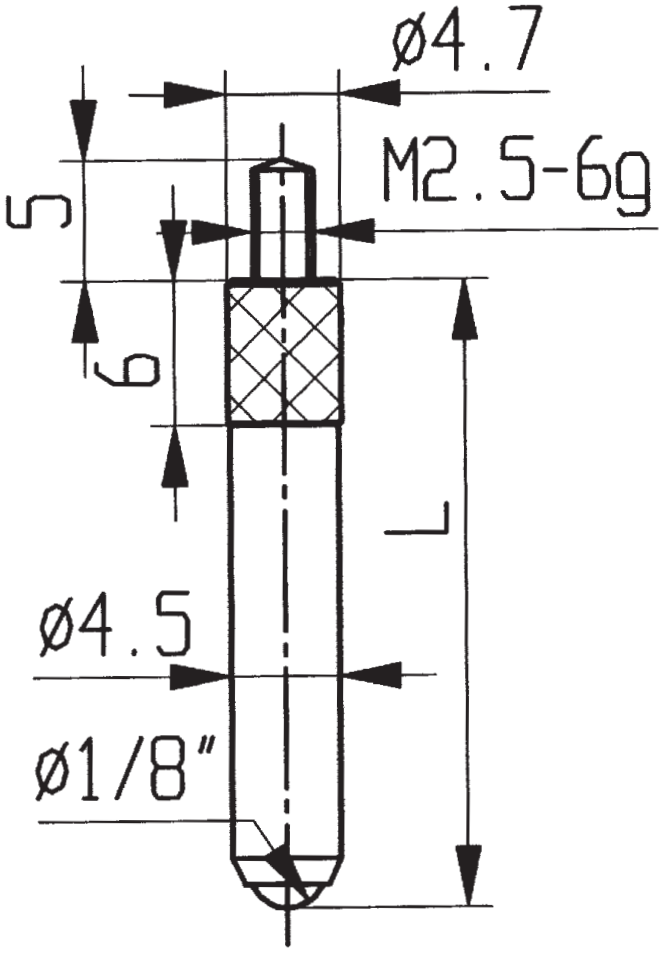

L = 10, 20, 30, 40, 50,
60, 70, 80, 90 mm

573/17 L