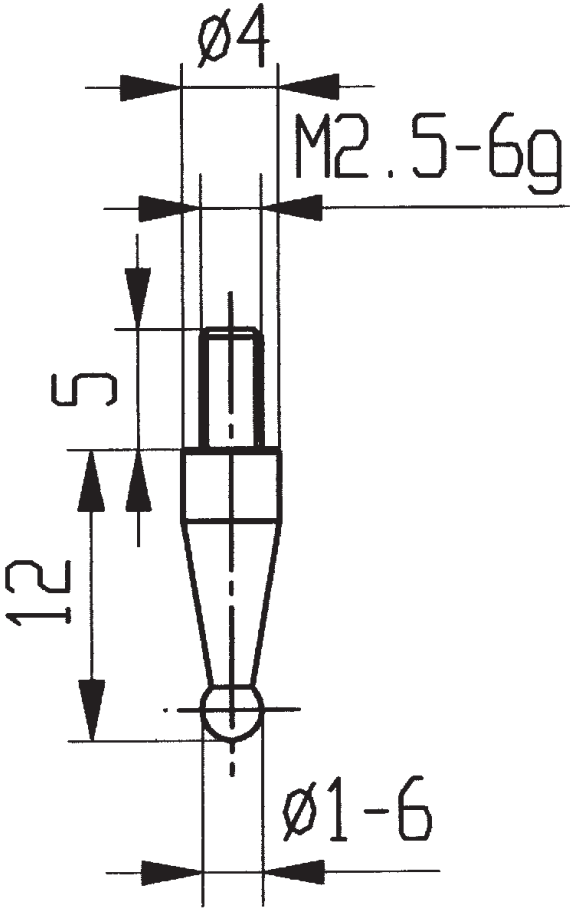

573/18 H