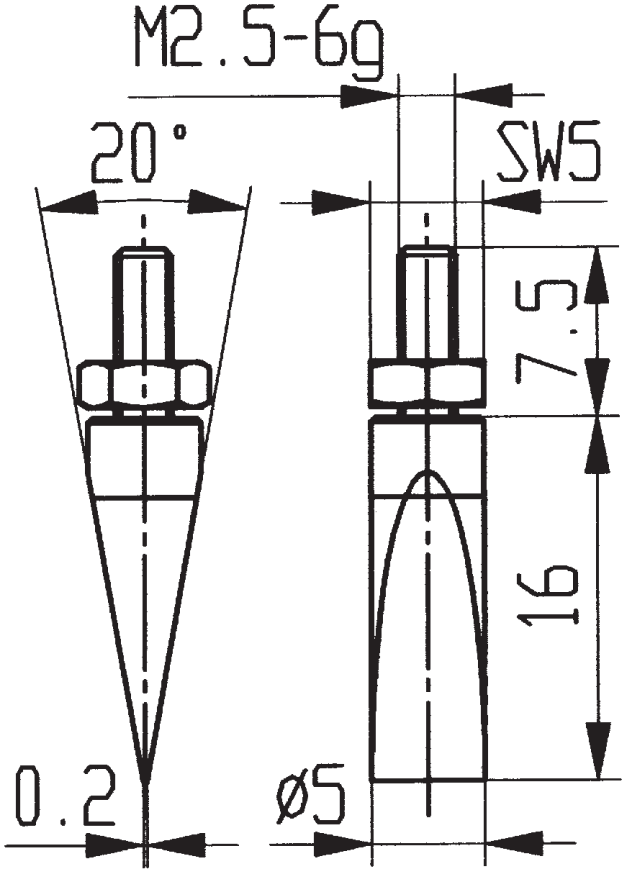

573/20 HE