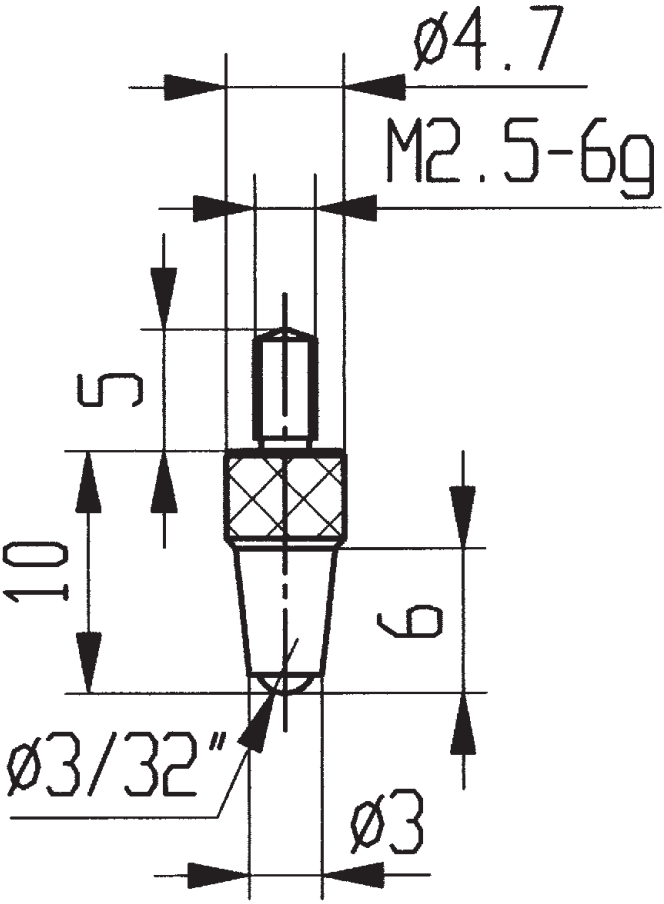

573/21