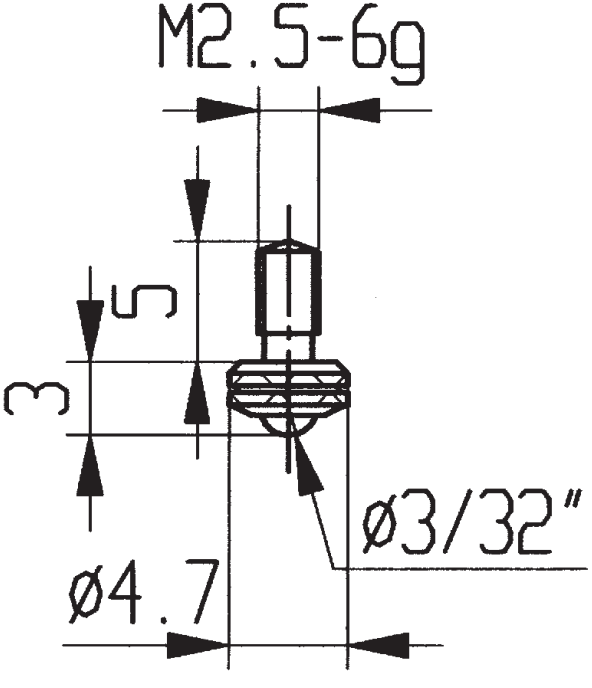

573/23 H