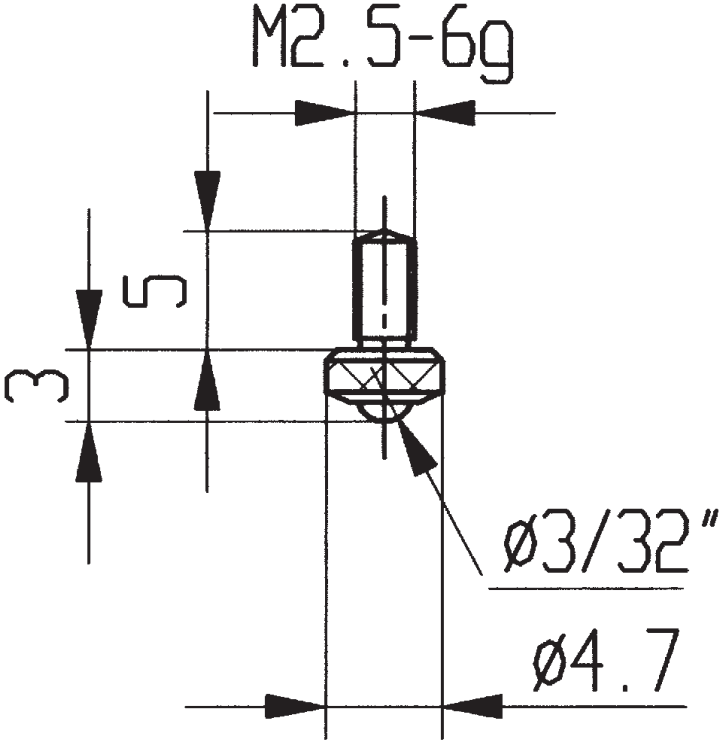

573/23