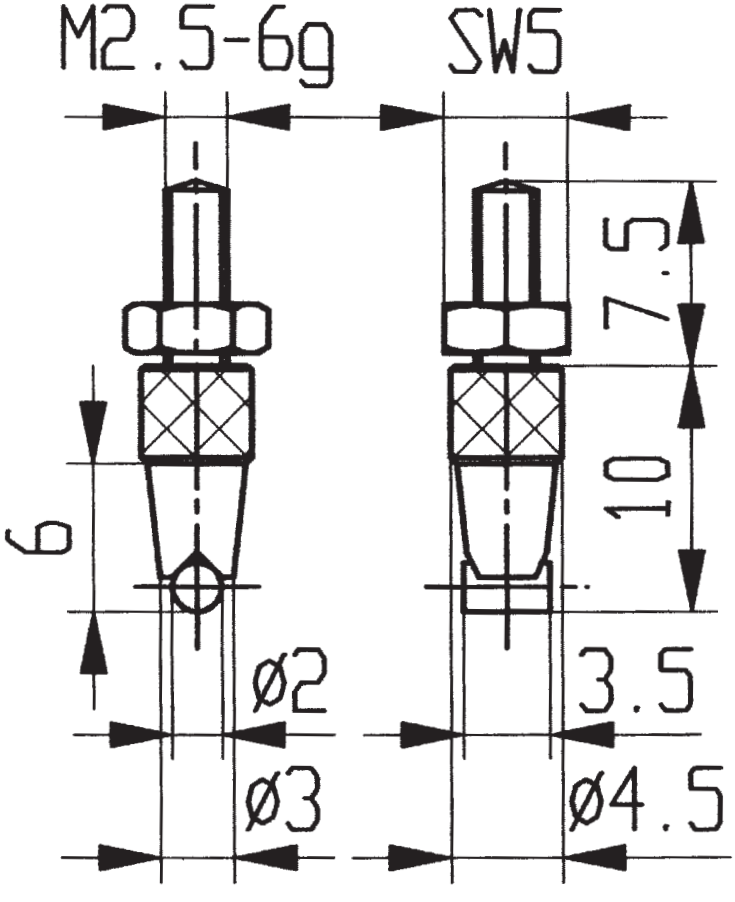

573/24 HE