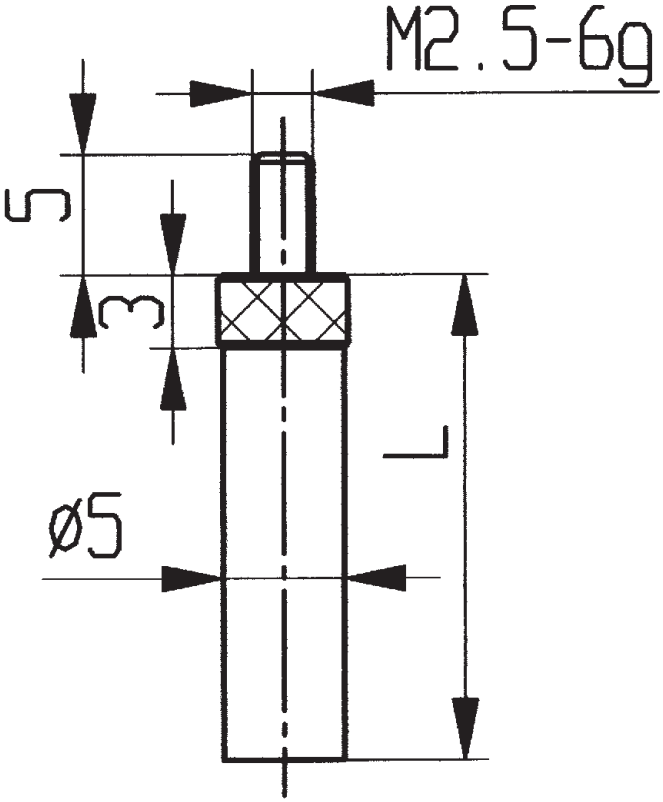

L = 3, 5, 8, 10, 12, 15, 20 mm

573/29 L