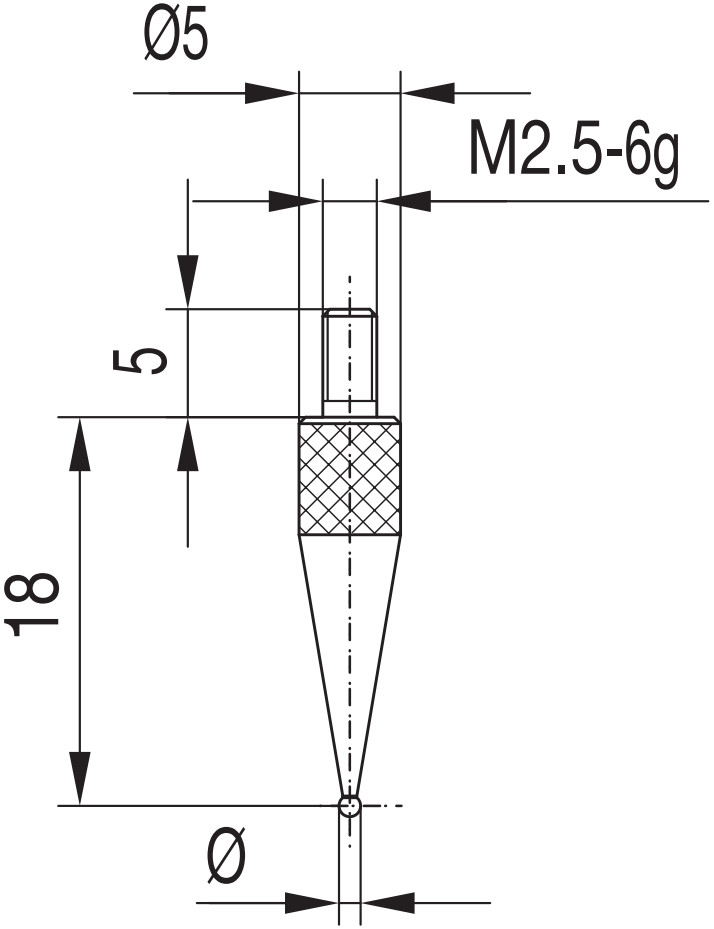

Ø = 1, 2, 3, 4 mm

573/42 R