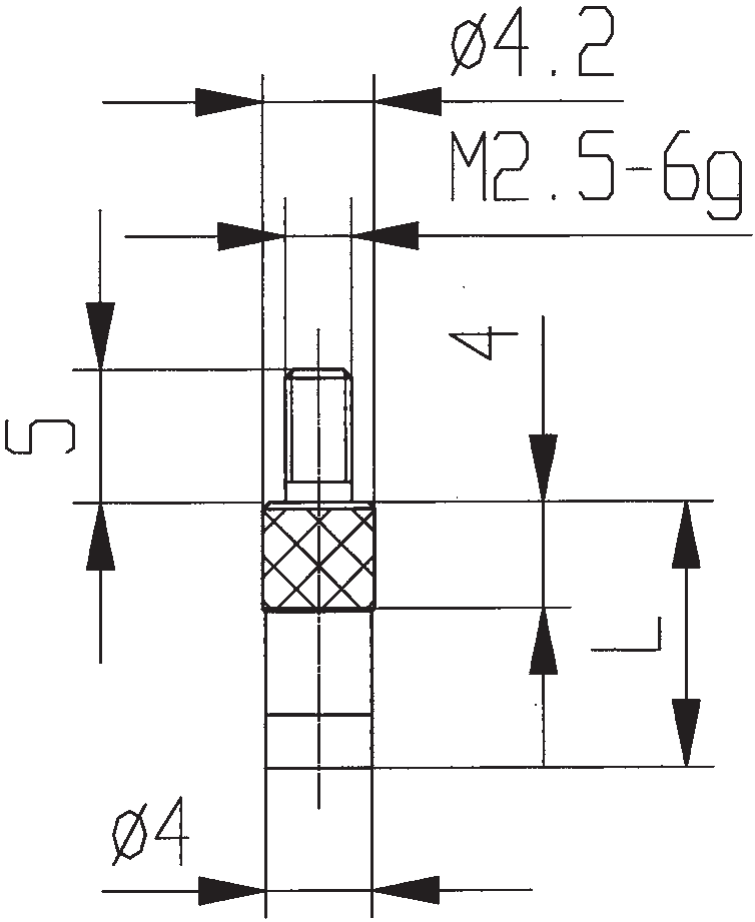

L = 6, 10, 20 mm

573/47 KUL