Lever Checking Holders



M8 THREAD
FOR CHECKING ARM

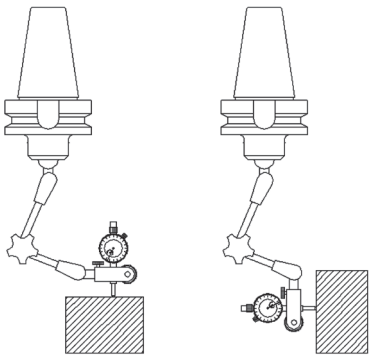

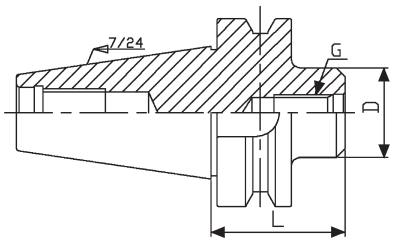

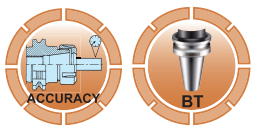

ORDER NO.	L	ØD	G	kgs	CODE NO.
BT40-M8	47	30	M8	1.3	3029-160
BT50-M8	58	30	M8		3029-161