Neo HV

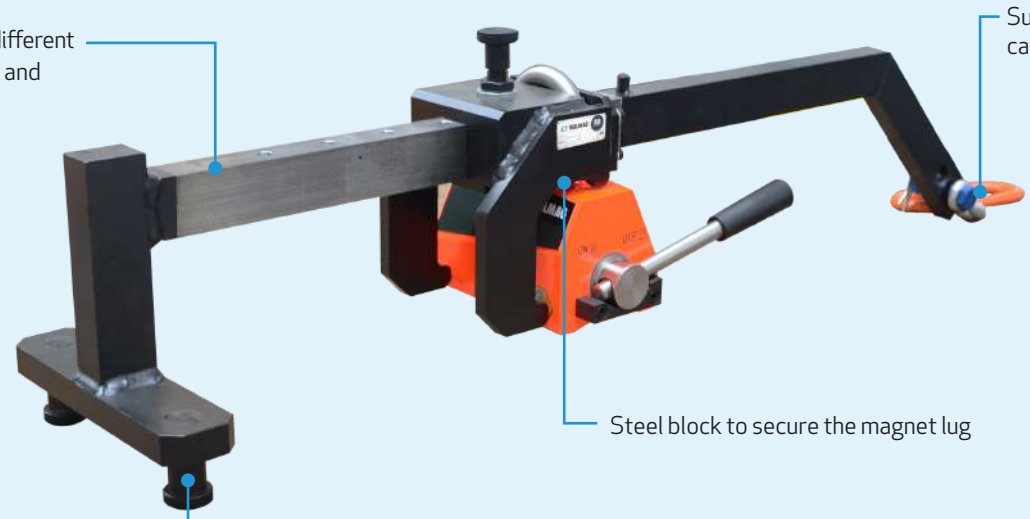

When to choose a Neo HV lifting arm:

The Neo HV is a lifting arm which, in combination with a lifting magnet, you can use to easily turn a workpiece from horizontal to vertical and vice versa. You will appreciate this when handling sheets, metal plates and round materials for lathes and horizontal machining centres.

APPLICATION	TECHNOLOGY	LIFTING CAPACITY	LOAD DIMENSION	TEMPERATURE
Lifting	Permanent	up to 1 000 kg	up to 1 000 x 2 000 mm	up to 80 °C

Other important parameters:

Safety factor: 3:1

Additional information:

+ lifting magnet is not included
+ the Neo 250, 500, and 1000 belt magnets are designed for Neo HV models

Use:

+ for manoeuvring workpieces to horizontal machining centres and lathes

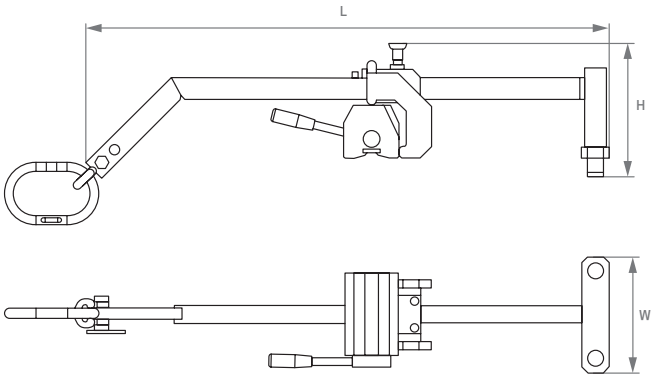

Catalog number	W (mm)	L (mm)	H (mm)	Lifting capacity (kg)	Workpiece width (mm)	Weight (kg)
LARM250	210	958	244	250	300 - 800	16
LARM500	210	1158	244	500	300 - 1000	20
LARM1000	210	1211	297	1000	300 - 1000	33