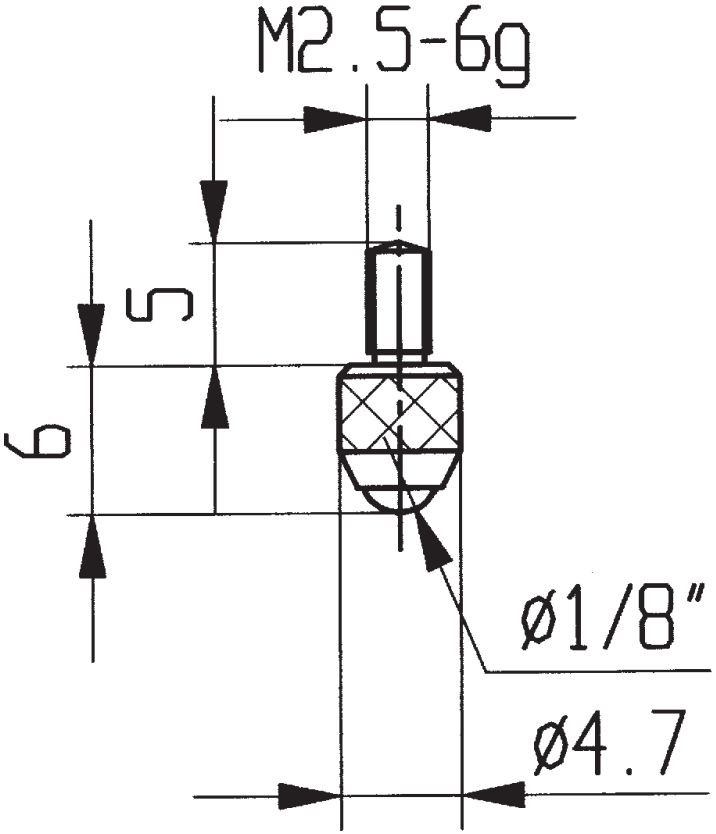

M2/70 C/R/S/KU