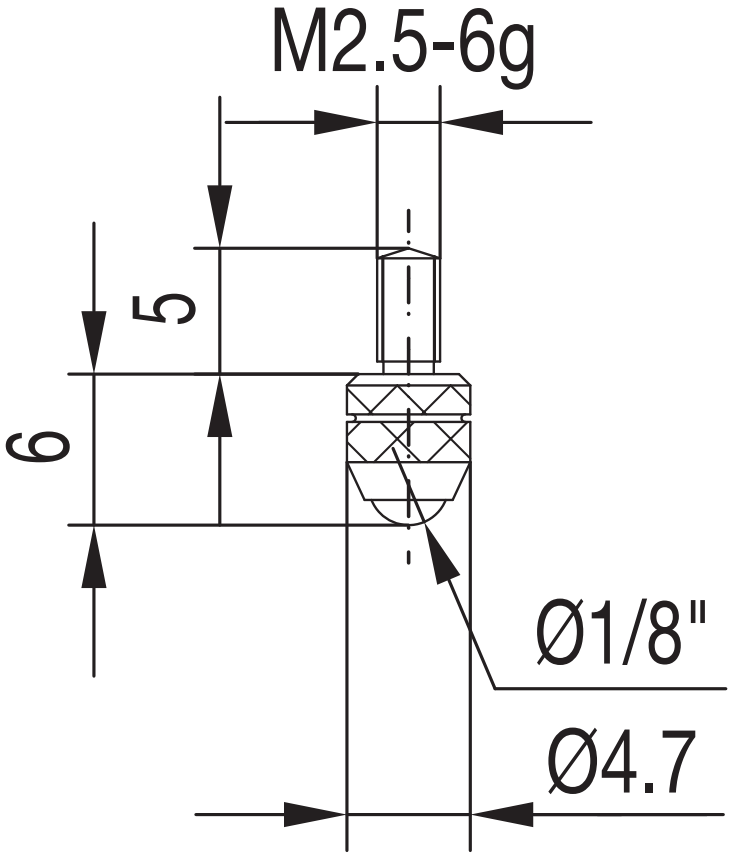

M2/70 H