Turning - Holder - External

Screw on type for DC** Insert

SDJCR Shown

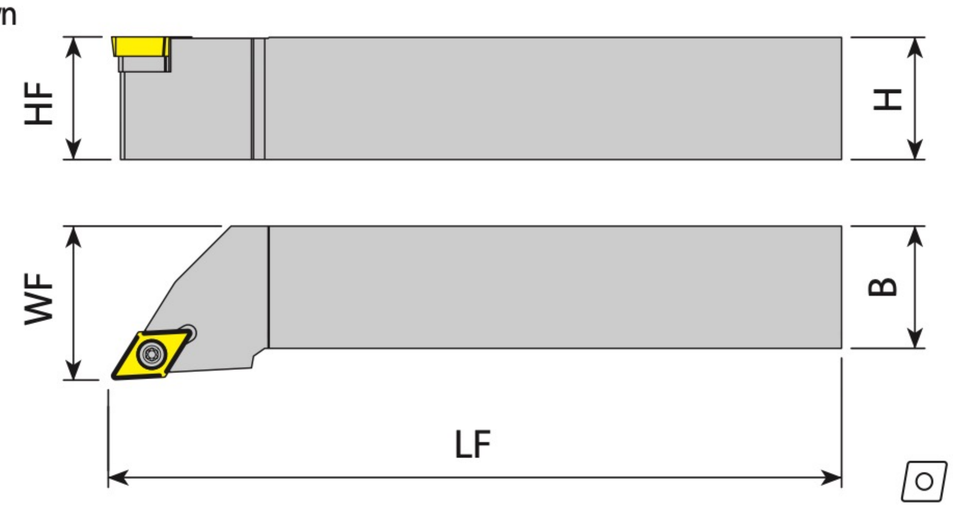

: Refer to p. 60

Unit: mm

Series		Designation	EDP 2700.. R	EDP 2700.. L	H (= HF)	B	WF	LF	Insert
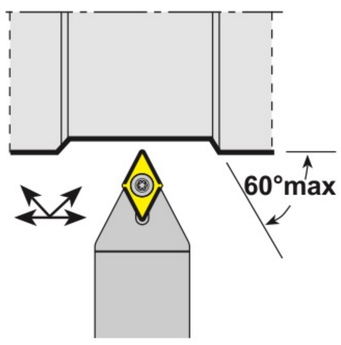	SDNCN Approach angle 62.5°	SDNCN 0808E 07	0723		08	08	4.0	70	DC0702
		SDNCN 1010E 07	0724		10	10	5.0	70	
		SDNCN 1212F 07	0123		12	12	6.0	80	
		SDNCN 1616H 07	0725		16	16	8.0	100	
		SDNCN 1616H 11	0124		16	16	8.0	100	DC11T3
		SDNCN 2020K 11	0125		20	20	10.0	125	
		SDNCN 2525M 11	0126		25	25	12.5	150	
		SDNCN 3232P 11	0726		32	32	16.0	170	
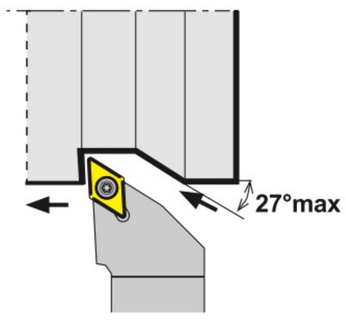	SDJCR/L Approach angle 93°	SDJCR/L 0808E 07	0713	0714	08	08	10.0	70	DC0702
		SDJCR/L 1010E 07	0715	0716	10	10	12.0	70	
		SDJCR/L 1212F 07	0113	0114	12	12	16.0	80	
		SDJCR/L 1616H 07	0717	0718	16	16	20.0	100	
		SDJCR/L 1616H 11	0117	0118	16	16	20.0	100	DC11T3
		SDJCR/L 2020K 11	0119	0120	20	20	25.0	125	
		SDJCR/L 2525M 11	0719	0720	25	25	32.0	150	
		SDJCR/L 3232P 11	0721	0722	32	32	40.0	170	
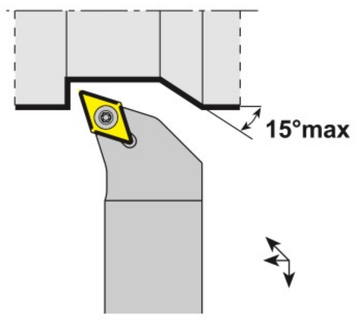	SDHCR/L Approach angle 107.5°	SDHCR/L 0808E 07	0697	0698	05	05	11.0	70	DC0702
		SDHCR/L 1010E 07	0699	0700	10	10	12.0	70	
		SDHCR/L 1212F 07	0701	0702	12	12	16.0	80	
		SDHCR/L 1616H 07	0703	0704	16	16	20.0	100	
		SDHCR/L 1616H 11	0705	0706	16	16	20.0	100	DC11T3
		SDHCR/L 2020K 11	0707	0708	20	20	25.0	125	
		SDHCR/L 2525M 11	0709	0710	25	25	32.0	150	
		SDHCR/L 3232P 11	0711	0712	32	32	40.0	170	

Series	Designation	Infomation	Screw	Shim	Shim Screw	Torx Key
SD..	..07	Description	Y4008-M2.5x6	-	-	Y80-T08
		EDP	8000127	-	-	18000165
	..11	Description	Y4015-M3.5x14	YAADN-2-0001	YAAV-06-M3.5x11	Y80-T15
		EDP	18000129	18000140	18000159	18000167