Arm Type Air Tapping Unit

VERTEX®

HIGH TORQUE HIGH EFFICENCY EASY OPERATION

WORK RANGE
1600X500m/m
RMAX. X MIN.

CE

※Base not included

VAT-1608/1612/1616
VAT-1620/1622/1624

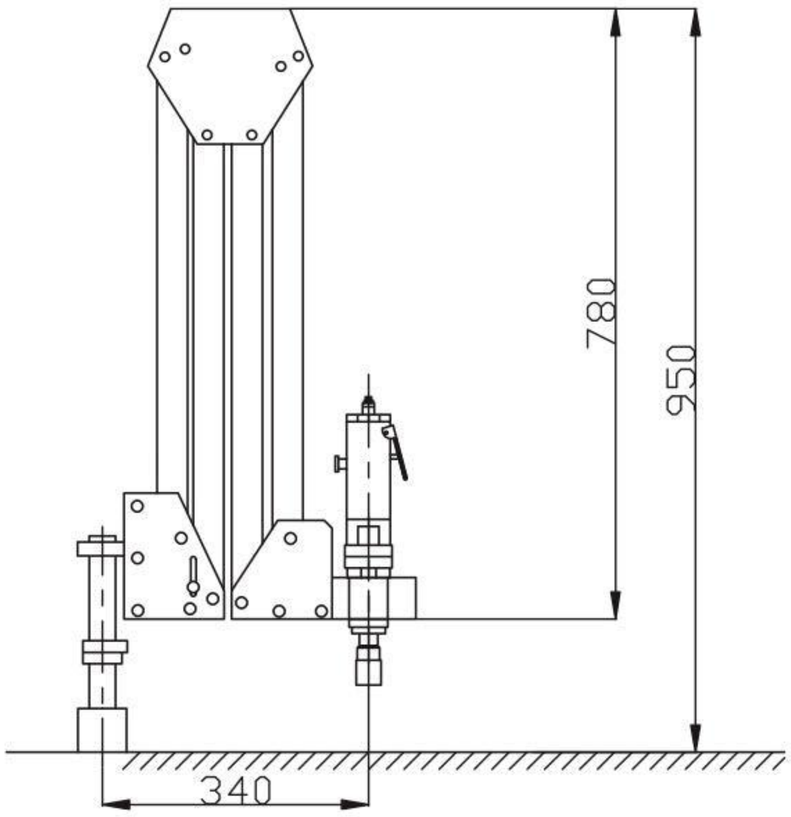

To solve all tapping problems

- Rapid positoning and high machining speed increase productivity.
- Lower tap damage rate, high thread accuracy.
- Tap shall never break for tapping through-hole or blind-hole.
- Tapping for heavier workpiece requires neither positioning equipments nor movement or large work area. Lower machining cost than that by CNC maghine,
- drilling machine or manual tapping operation. Drilling to max: 6mm diameter
- Easy operation, no experience or strength required.
- Without stand plate.
- Air pressure: 6~8 kgs/cm²
- VAT-08/12 series require: 5HP compressor
- VAT-16/20 series require: 10HP compressor
-

※ GUARNTEED FOR 3 MONTHS.
※ MUST INSTALL ON A STABLE / HARD SURFACE FOR PARALLEL WORK.

Suggest collet size for standard acces

VAT-□□08 COLLET SIZE TC312-M3,M4,M5,M6*2,M8
VAT-□□12 COLLET SIZE TC312-M5,M6,M8*2,M10,M12
VAT-□□16 COLLET SIZE TC312/TC820
TC312-M8,M10
TC820-M10,M12,M14,M16
VAT-□□20 COLLET SIZE TC820-M10,M12,M14,M16,M18,M20
VAT-□□22 COLLET SIZE TC820-M12,M14,M16,M18,M20,M22
VAT-□□24 COLLET SIZE TC820-M14,M16,M18,M20,M22,M24

JIS & DIN376 Most Populared

ORDER NO.	VAT-1608	VAT-1612	VAT-1616	VAT-1620	VAT-1622	VAT-1624
For Tap	M3~M8	M5~M12	M8~M16	M10~M20	M12~M22	M14~M24
	TC-312	TC-312	TC-820	TC-820	TC-820	TC-820
Speed (rpm)	700	400	250	200	200	100
Weight (kgs)	16.9	17	21.1	24.6	24.6	26.10
Work Range	Rmax 1600mm					
	Rmin 500mm					
CODE NO.	3404-420	3404-421	3404-422	3404-428	3404-428A	3404-428B

VAT-1608, 1612, 1616, 1620, 1622, 1624 STANDARD ACCESSORIES

- Air tapping spindle
- Parallel arm
- Table mounting column
- Air combination
- Choose any six safety clutch tapping adapters