V-Block With Clamp

Alloysteel Grounded HRC50°

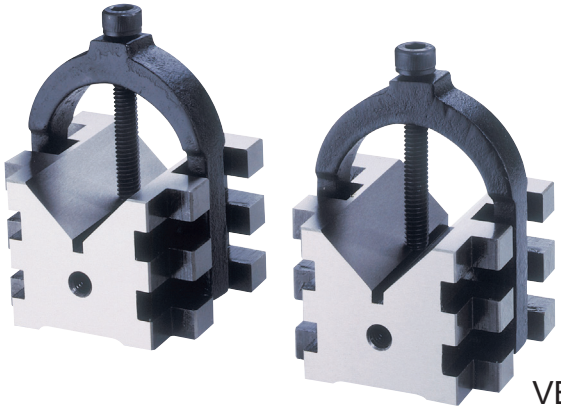

PAIRS
VBC-003

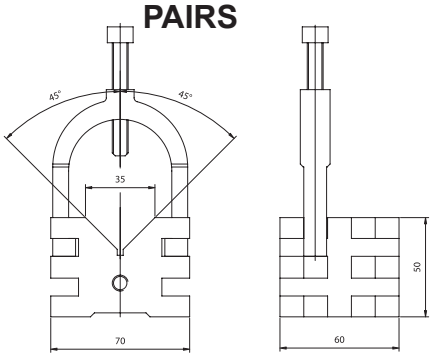

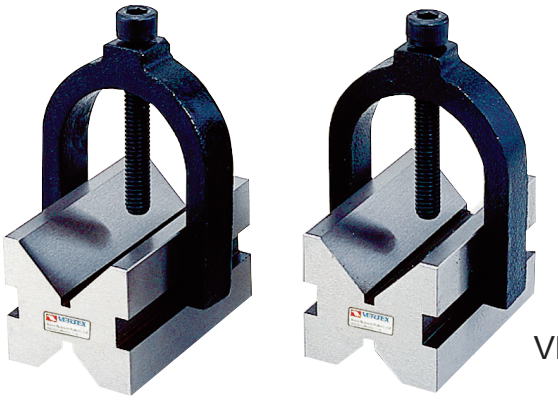

PAIRS
VBC-243

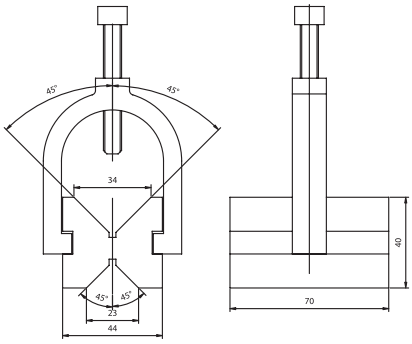

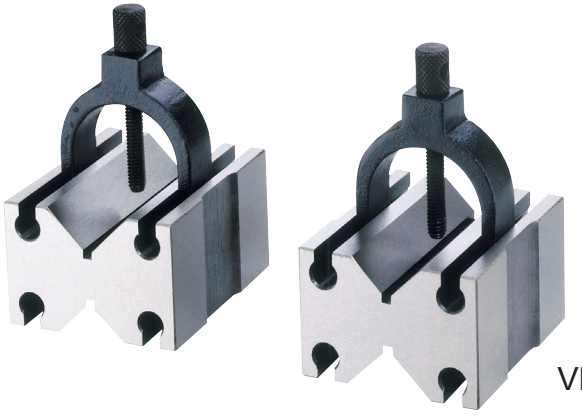

PAIRS
VBC-006

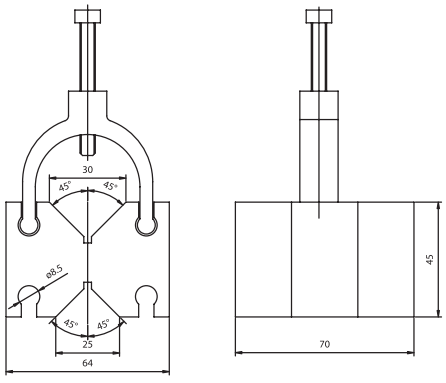



SINGLE
VBC-009

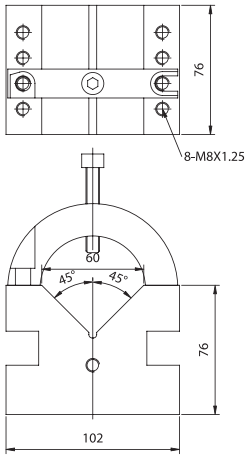

ORDER NO.	W	H	L	W.OF SMALL VEE	W.OF LARGER VEE	PACKING	G.W. (kgs)	CODE NO.
VBC-003	2.36 60mm	1.86 50mm	2.75 70mm	NON	V35 X V5.5	110x80x110mm	2.4	2007-010
VBC-243	2 3/4 70mm	1 3/4 45mm	1 5/8 42mm	NON	V32 X V3.5	75x80x100mm	1.9	2007-020
VBC-006	2 1/2 64mm	1 3/4 45mm	2 3/4 70mm	V25 X V3.5	V30 X V3.5	110x80x110mm	2.6	2007-030
VBC-009	4 102mm	3 76mm	3 76mm	NON	V59 X V4.5	70x50x110mm	3.9	2007-040