Precision Pneumatic Ang-Fixed Power Vise

VERTEX®

SAME HEIGHT GUARNTEE

Suitable for Mass production and to be used on machine centers, milling machines, drilling machines and special purpose machines.

The greatest safety distance of clamping: The switch speed is only 1.5 seconds, and the safety distance of clamping can be up to 8mm. We design the hand wheel safety line in addition for anyone to distinguish the clamping safety distance of tools from exceeding the limit easily by eyes.

Down trust “semi-spherical segment” mechanism eliminates jaw liffing and work-piece liffing.

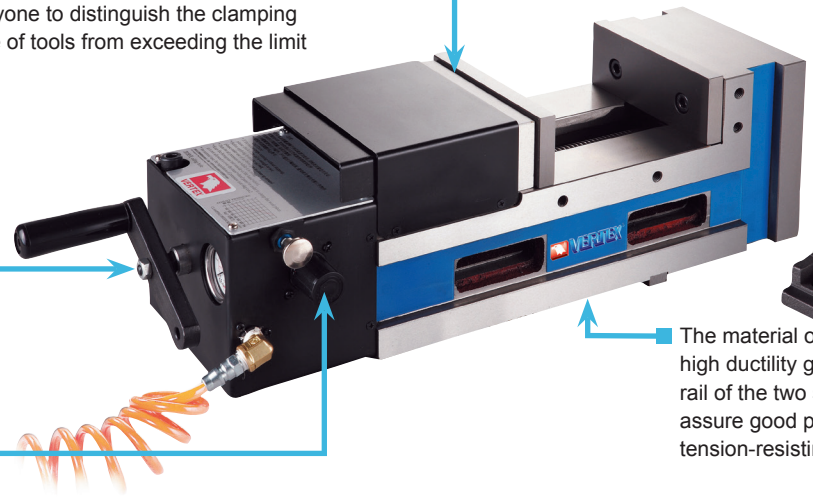



The material of the vise itself adopts the one-step design of high ductility graphitized casting iron (FCD-60), and the Bottom rail of the two sides has heating treatment (HRC-45º) that can assure good performance on Accuracy, wear-resisting, and tension-resisting.

Regulator: If the air pressure is low, 8 kgf/cm^2, it can still achieve the super strong clamping capacity of 9000 kg/cm^2. The clamping capacity from 0~9000 kg/cm^2 can be set freely and adjust via pressure regulator.
Automatically seeking the highest source of air pressure: When the required pressure was set, it will not loose under low air pressure.



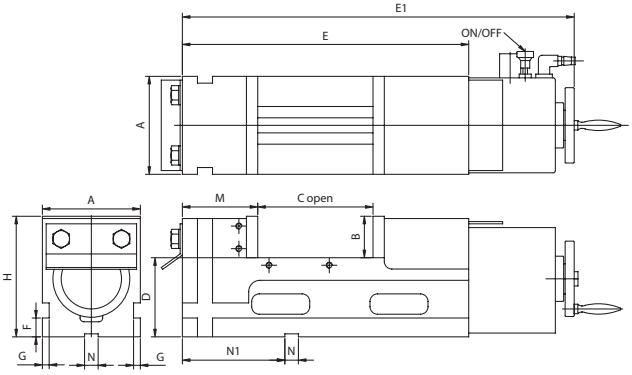

ORDER NO.	A	B	C OPEN	D	E	E1	F	G	H	M	N	N1	Max. Clamp Force (kgf)	N.W. (kgs)	CODE NO.
VMC-4P	100	48	100	100	320	450	25	8	148	100	16	145	3200	27	4005-076
VMC-5P	130	55	150	105	380	520	25	9	160	100	18	145	6000	38	4005-070
VMC-6P	160	58	160	105	400	540	25	9	163	100	18	145	6000	48	4005-071
VMC-6PL	160	58	250	105	490	630	25	9	163	100	18	145	6000	51	4005-072
VMC-7P	180	63	200	110	460	600	25	12	173	108	18	180	9000	65	4005-073
VMC-8P	200	63	200	110	470	610	25	12	173	108	18	180	9000	74	4005-074
VMC-8PL	200	63	300	110	570	710	25	12	173	108	18	180	9000	79	4005-075



Feature:

- Double clamp function for massive production.
- Sliding surface are harden and ground.

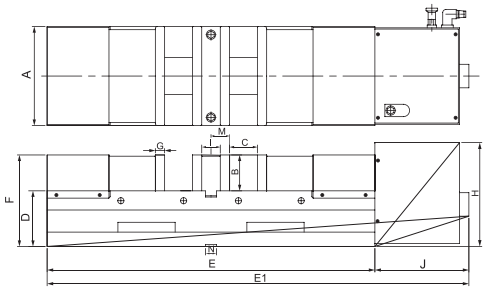

HEAVY DUTY

Double Clamp TYPE

Unit:mm

ORDER NO.	A	B	C OPEN	D	E	E1	F	G	H	I	J	N	Max. Clamp Force (kgf)	N.W. (KG)	G.W. (KG)	CODE NO.
VMC-6PD	160	58	0-100	90	530	682	148	15	168	30	152	18	4000	63	66	4005-085