SPADE DRILL INSERTS - CARBIDE P40

EINWEG BOHREINSATZ - VOLLHARTMETALL P40
Plaquettes SPADE DRILL - Carbure P40
CUSPIDI SPADE DRILL - MD P40

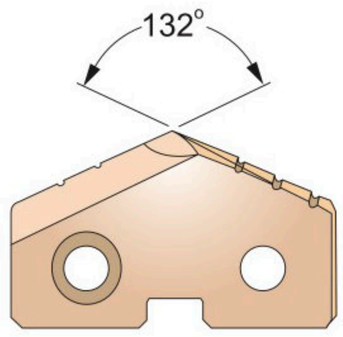

- For general use in carbon steels and alloy steels.
- Set up time can be reduced due to changing inserts easily on the machine.
- Any non-standard size available.

- Für allgemeine Anwendung in Kohlenstoffstählen und legierten Stählen
- Reduzierte Rüstzeiten, einfacher Einsatzwechsel auf der Maschine
- Jede Abmessung außerhalb des Kataloges lieferbar

Cutting conditions : p.A380

Recommended ToolHolder
- Flat Shank
- INDEXABLE DRILL HOLDER
- ER COLLET CHUCK

Series Min. to Max. mm (inch)	Diameter Inch (inch)	Diameter Metric (mm)	Diameter Decimal (inch)	Thick Metric (mm, inch)	EDP No. CARBIDE P40 TiN	TiCN	TiAlN
Y Ø9.50 (.374) to Ø11.07 (.436)		9.50	.3740	2.4 (3/32)	S1855095	S1860095	S1865095
	3/8	9.53	.3750		S1805024	S1810024	S1815024
		9.80	.3860		S1855098	S1860098	S1865098
	25/64	9.92	.3906		S1805025	S1810025	S1815025
		10.00	.3937		S1855100	S1860100	S1865100
		10.20	.4016		S1855102	S1860102	S1865102
	13/32	10.32	.4063		S1805026	S1810026	S1815026
		10.50	.4134		S1855105	S1860105	S1865105
	27/64	10.72	.4219		S1805027	S1810027	S1815027
		10.80	.4252		S1855108	S1860108	S1865108
		11.00	.4331		S1855110	S1860110	S1865110
Z Ø11.11(.437) to Ø12.95(.510)	7/16	11.11	.4375	2.4 (3/32)	S1805028	S1810028	S1815028
		11.50	.4528		S1855115	S1860115	S1865115
	29/64	11.51	.4531		S1805029	S1810029	S1815029
	15/32	11.91	.4688		S1805030	S1810030	S1815030
		12.00	.4724		S1855120	S1860120	S1865120
	31/64	12.30	.4844		S1805031	S1810031	S1815031
		12.50	.4921		S1855125	S1860125	S1865125
	1/2	12.70	.5000		S1805032	S1810032	S1815032
0 Ø12.98 (.511) to Ø17.65 (.695)		13.00	.5118	3.2 (1/8)	S1855130	S1860130	S1865130
	33/64	13.10	.5156		S1805033	S1810033	S1815033
	17/32	13.49	.5313		S1805034	S1810034	S1815034
		13.50	.5315		S1855135	S1860135	S1865135
	35/64	13.89	.5469		S1805035	S1810035	S1815035
		14.00	.5512		S1855140	S1860140	S1865140
	9/16	14.29	.5625		S1805036	S1810036	S1815036
		14.50	.5709		S1855145	S1860145	S1865145
	37/64	14.68	.5781		S1805037	S1810037	S1815037
		15.00	.5906		S1855150	S1860150	S1865150
	19/32	15.08	.5938		S1805038	S1810038	S1815038
	39/64	15.48	.6094		S1805039	S1810039	S1815039
		15.50	.6102		S1855155	S1860155	S1865155
	5/8	15.88	.6250		S1805040	S1810040	S1815040
		16.00	.6299		S1855160	S1860160	S1865160

◎ : Excellent ○ : Good

ISO	P											M			K					
Material Description	Non-alloy steel					Low alloy steel				High alloyed steel, and tool steel		Stainless steel			Grey cast iron		Nodular cast iron		Malleable cast iron	
VDI 3323	1	2	3	4	5	6	7	8	9	10	11	12	13	14	15	16	17	18	19	20
HRc		13	25	28	32	10	29	32	38	15	35	15	23	10	10	26	3	25		21
HB	125	190	250	270	300	180	275	300	350	200	325	200	240	180	180	260	160	250	130	230
Recommended	◎	◎	◎	◎		◎	◎	◎	◎	◎	◎	○	○	○	○	○	○	○	○	○

ISO	N										S							H			
Material Description	Aluminum-wrought alloy		Aluminum-cast, alloyed			Copper and Copper Alloys (Bronze / Brass)			Non Metallic Materials		Heat Resistant Super Alloys					Titanium Alloys		Hardened steel		Chilled Cast Iron	Hardened Cast Iron
VDI 3323	21	22	23	24	25	26	27	28	29	30	31	32	33	34	35	36	37	38	39	40	41
HRc											15	30	25	38	34			55	60	42	55
HB	60	100	75	90	130	110	90	100			200	280	250	350	320	400 Rm	1050 Rm	550	630	400	550
Recommended	○	○					○				○	○	○	○	○			◎			

SPADE DRILLS

SERIES 0, 1

SPADE DRILL INSERTS - CARBIDE P40

EINWEG BOHREINSATZ - VOLLHARTMETALL P40
Plaquettes SPADE DRILL - Carbure P40
CUSPIDI SPADE DRILL - MD P40

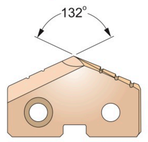

- For general use in carbon steels and alloy steels.
- Set up time can be reduced due to changing inserts easily on the machine.
- Any non-standard size available.

- Für allgemeine Anwendung in Kohlenstoffstählen und legierten Stählen
- Reduzierte Rüstzeiten, einfacher Einsatzwechsel auf der Maschine
- Jede Abmessung außerhalb des Kataloges lieferbar

Cutting conditions : p.A380

Recommended ToolHolder: Flat Shank — INDEXABLE DRILL HOLDER, ER COLLET CHUCK

Series Min. to Max. mm (inch)	Diameter Inch (inch)	Diameter Metric (mm)	Diameter Decimal (inch)	Thick Metric (mm, inch)	EDP No. CARBIDE P40 TiN	TiCN	TiAlN
0 Ø12.98(.511) to Ø17.65(.695)	41/64	16.27	.6406	3.2 (1/8)	S1805041	S1810041	S1815041
		16.50	.6496		S1855165	S1860165	S1865165
	21/32	16.67	.6563		S1805042	S1810042	S1815042
		17.00	.6693		S1855170	S1860170	S1865170
	43/64	17.07	.6719		S1805043	S1810043	S1815043
	11/16	17.46	.6875		S1805044	S1810044	S1815044
		17.50	.6890		S1855175	S1860175	S1865175
1 Ø17.53 (.690) to Ø24.38 (.960)	45/64	17.86	.7031	4.0 (5/32)	S1805045	S1810045	S1815045
		18.00	.7087		S1855180	S1860180	S1865180
	23/32	18.26	.7188		S1805046	S1810046	S1815046
		18.50	.7283		S1855185	S1860185	S1865185
	47/64	18.65	.7344		S1805047	S1810047	S1815047
		19.00	.7480		S1855190	S1860190	S1865190
	3/4	19.05	.7500		S1805048	S1810048	S1815048
	49/64	19.45	.7656		S1805049	S1810049	S1815049
		19.50	.7677		S1855195	S1860195	S1865195
	25/32	19.84	.7813		S1805050	S1810050	S1815050
		20.00	.7874		S1855200	S1860200	S1865200
	51/64	20.24	.7969		S1805051	S1810051	S1815051
		20.50	.8071		S1855205	S1860205	S1865205
	13/16	20.64	.8125		S1805052	S1810052	S1815052
		21.00	.8268		S1855210	S1860210	S1865210
	27/32	21.43	.8438		S1805054	S1810054	S1815054
	55/64	21.83	.8594		S1805055	S1810055	S1815055
		22.00	.8661		S1855220	S1860220	S1865220
	7/8	22.23	.8750		S1805056	S1810056	S1815056
	57/64	22.62	.8906		S1805057	S1810057	S1815057
		23.00	.9055		S1855230	S1860230	S1865230
	29/32	23.02	.9063		S1805058	S1810058	S1815058
	59/64	23.42	.9219		S1805059	S1810059	S1815059
	15/16	23.81	.9375		S1805060	S1810060	S1815060
		24.00	.9449		S1855240	S1860240	S1865240

◎ : Excellent ○ : Good

ISO	P																					M			K					
Material Description	Non-alloy steel					Low alloy steel					High alloyed steel, and tool steel		Stainless steel			Grey cast iron		Nodular cast iron			Malleable cast iron			
VDI 3323	1	2	3	4	5	6	7	8	9	10	11	12	13	14	15	16	17	18	19	20				
HRc		13	25	28	32	10	29	32	38	15	35	15	23	10	10	26	3	25		21				
HB	125	190	250	270	300	180	275	300	350	200	325	200	240	180	180	260	160	250	130	230				
Recommended	◎	◎	◎	◎		◎	◎	◎	◎	◎	◎	○	○	○	○	○	○	○	○	○				

ISO	N										S							H			
Material Description	Aluminum-wrought alloy		Aluminum-cast, alloyed			Copper and Copper Alloys (Bronze / Brass)			Non Metallic Materials		Heat Resistant Super Alloys					Titanium Alloys		Hardened steel		Chilled Cast Iron	Hardened Cast Iron
VDI 3323	21	22	23	24	25	26	27	28	29	30	31	32	33	34	35	36	37	38	39	40	41
HRc											15	30	25	38	34			55	60	42	55
HB	60	100	75	90	130	110	90	100			200	280	250	350	320	400 Rm	1050 Rm	550	630	400	550
Recommended	○	○					○				○	○	○	○	○			◎			

SPADE DRILLS

SERIES 2

SPADE DRILL INSERTS - CARBIDE P40

EINWEG BOHREINSATZ - VOLLHARTMETALL P40
Plaquettes SPADE DRILL - Carbure P40
CUSPIDI SPADE DRILL - MD P40

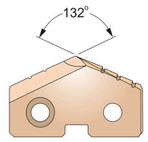

- For general use in carbon steels and alloy steels.
- Set up time can be reduced due to changing inserts easily on the machine.
- Any non-standard size available.

- Für allgemeine Anwendung in Kohlenstoffstählen und legierten Stählen
- Reduzierte Rüstzeiten, einfacher Einsatzwechsel auf der Maschine
- Jede Abmessung außerhalb des Kataloges lieferbar

Cutting conditions : p.A380

Recommended ToolHolder: Flat Shank — INDEXABLE DRILL HOLDER, ER COLLET CHUCK

Series Min. to Max. mm (inch)	Diameter Inch (inch)	Diameter Metric (mm)	Diameter Decimal (inch)	Thick Metric (mm, inch)	EDP No. CARBIDE P40 TiN	TiCN	TiAlN
2 Ø24.41 (.961) to Ø35.05 (1.380)	31/32	24.61	.9688	4.8 (3/16)	S1805062	S1810062	S1815062
	63/64	25.00	.9843		S1855250	S1860250	S1865250
	1	25.40	1.0000		S1805100	S1810100	S1815100
	1-1/64	25.80	1.0156		S1805101	S1810101	S1815101
		26.00	1.0236		S1855260	S1860260	S1865260
	1-1/32	26.19	1.0313		S1805102	S1810102	S1815102
	1-3/64	26.59	1.0469		S1805103	S1810103	S1815103
	1-1/16	26.99	1.0625		S1805104	S1810104	S1815104
		27.00	1.0630		S1855270	S1860270	S1865270
	1-3/32	27.78	1.0938		S1805106	S1810106	S1815106
		28.00	1.1024		S1855280	S1860280	S1865280
	1-7/64	28.18	1.1094		S1805107	S1810107	S1815107
	1-1/8	28.58	1.1250		S1805108	S1810108	S1815108
		29.00	1.1417		S1855290	S1860290	S1865290
	1-5/32	29.37	1.1563		S1805110	S1810110	S1815110
		30.00	1.1811		S1855300	S1860300	S1865300
	1-3/16	30.16	1.1875		S1805112	S1810112	S1815112
	1-7/32	30.96	1.2188		S1805114	S1810114	S1815114
		31.00	1.2205		S1855310	S1860310	S1865310
	1-1/4	31.75	1.2500		S1805116	S1810116	S1815116
		32.00	1.2598		S1855320	S1860320	S1865320
	1-9/32	32.54	1.2813		S1805118	S1810118	S1815118
		33.00	1.2992		S1855330	S1860330	S1865330
	1-5/16	33.34	1.3125		S1805120	S1810120	S1815120
		34.00	1.3386		S1855340	S1860340	S1865340
	1-11/32	34.13	1.3438		S1805122	S1810122	S1815122
	1-3/8	34.93	1.3750		S1805124	S1810124	S1815124
		35.00	1.3780		S1855350	S1860350	S1865350

◎ : Excellent ○ : Good

ISO	P															M			K					
Material Description	Non-alloy steel					Low alloy steel					High alloyed steel, and tool steel		Stainless steel			Grey cast iron		Nodular cast iron			Malleable cast iron			
VDI 3323	1	2	3	4	5	6	7	8	9	10	11	12	13	14	15	16	17	18	19	20				
HRc		13	25	28	32	10	29	32	38	15	35	15	23	10	10	26	3	25		21				
HB	125	190	250	270	300	180	275	300	350	200	325	200	240	180	180	260	160	250	130	230				
Recommended	◎	◎	◎	◎		◎	◎	◎	◎	◎	◎	○	○	○	○	○	○	○	○	○				

ISO	N										S							H			
Material Description	Aluminum-wrought alloy		Aluminum-cast, alloyed			Copper and Copper Alloys (Bronze / Brass)			Non Metallic Materials		Heat Resistant Super Alloys					Titanium Alloys		Hardened steel		Chilled Cast Iron	Hardened Cast Iron
VDI 3323	21	22	23	24	25	26	27	28	29	30	31	32	33	34	35	36	37	38	39	40	41
HRc											15	30	25	38	34			55	60	42	55
HB	60	100	75	90	130	110	90	100			200	280	250	350	320	400 Rm	1050 Rm	550	630	400	550
Recommended	○	○					○				○	○	○	○	○			◎			

CARBIDE
HSS
i-ONE DRILLS
i-DREAM DRILLS
DREAM DRILLS -PRO
DREAM DRILLS -GENERAL
DREAM DRILLS -HIGH FEED
DREAM DRILLS -FLAT BOTTOM
DREAM DRILLS -INOX
DREAM DRILLS -ALU
DREAM DRILLS -MQL
DREAM DRILLS for HIGH HARDENED STEELS
GENERAL CARBIDE DRILLS
MULTI-1 DRILLS
HPD DRILLS
GOLD-P DRILLS
SUPER-GP DRILLS
STRAIGHT SHANK DRILLS
TAPER SHANK DRILLS
NC-SPOTTING DRILLS
CENTER DRILLS
SPADE DRILLS
REAMERS
COUNTER SINKS
COUNTER BORES
TECHNICAL DATA

SPADE DRILLS

SERIES 3

SPADE DRILL INSERTS - CARBIDE P40

EINWEG BOHREINSATZ - VOLLHARTMETALL P40
Plaquettes SPADE DRILL - Carbure P40
CUSPIDI SPADE DRILL - MD P40

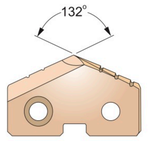

- For general use in carbon steels and alloy steels.
- Set up time can be reduced due to changing inserts easily on the machine.
- Any non-standard size available.

- Für allgemeine Anwendung in Kohlenstoffstählen und legierten Stählen
- Reduzierte Rüstzeiten, einfacher Einsatzwechsel auf der Maschine
- Jede Abmessung außerhalb des Kataloges lieferbar

Cutting conditions : p.A380

Recommended ToolHolder — Flat Shank: INDEXABLE DRILL HOLDER, ER COLLET CHUCK

Series Min. to Max. mm (inch)	Diameter Inch (inch)	Diameter Metric (mm)	Diameter Decimal (inch)	Thick Metric (mm, inch)	EDP No. CARBIDE P40 TiN	TiCN	TiAlN
3 Ø34.37 (1.353) to Ø47.80 (1.882)	1-13/32	35.72	1.4063	6.4 (1/4)	S1805126	S1810126	S1815126
		36.00	1.4173		S1855360	S1860360	S1865360
	1-7/16	36.51	1.4375		S1805128	S1810128	S1815128
		37.00	1.4567		S1855370	S1860370	S1865370
	1-15/32	37.31	1.4688		S1805130	S1810130	S1815130
		38.00	1.4961		S1855380	S1860380	S1865380
	1-1/2	38.10	1.5000		S1805132	S1810132	S1815132
	1-17/32	38.89	1.5313		S1805134	S1810134	S1815134
		39.00	1.5354		S1855390	S1860390	S1865390
	1-9/16	39.69	1.5625		S1805136	S1810136	S1815136
		40.00	1.5748		S1855400	S1860400	S1865400
	1-19/32	40.48	1.5938		S1805138	S1810138	S1815138
		41.00	1.6142		S1855410	S1860410	S1865410
	1-5/8	41.28	1.6250		S1805140	S1810140	S1815140
		42.00	1.6535		S1855420	S1860420	S1865420
	1-21/32	42.07	1.6563		S1805142	S1810142	S1815142
	1-11/16	42.86	1.6875		S1805144	S1810144	S1815144
		43.00	1.6929		S1855430	S1860430	S1865430
	1-23/32	43.66	1.7188		S1805146	S1810146	S1815146
		44.00	1.7323		S1855440	S1860440	S1865440
	1-3/4	44.45	1.7500		S1805148	S1810148	S1815148
		45.00	1.7717		S1855450	S1860450	S1865450
	1-25/32	45.24	1.7813		S1805150	S1810150	S1815150
		46.00	1.8110		S1855460	S1860460	S1865460
	1-13/16	46.04	1.8125		S1805152	S1810152	S1815152
	1-27/32	46.83	1.8438		S1805154	S1810154	S1815154
		47.00	1.8504		S1855470	S1860470	S1865470
	1-7/8	47.63	1.8750		S1805156	S1810156	S1815156

◎ : Excellent ○ : Good

ISO	P											M			K					
Material Description	Non-alloy steel					Low alloy steel				High alloyed steel, and tool steel		Stainless steel			Grey cast iron		Nodular cast iron		Malleable cast iron	
VDI 3323	1	2	3	4	5	6	7	8	9	10	11	12	13	14	15	16	17	18	19	20
HRc		13	25	28	32	10	29	32	38	15	35	15	23	10	10	26	3	25		21
HB	125	190	250	270	300	180	275	300	350	200	325	200	240	180	180	260	160	250	130	230
Recommended	◎	◎	◎	◎		◎	◎	◎	◎	◎	◎	○	○	○	○	○	○	○	○	○

ISO	N										S							H			
Material Description	Aluminum-wrought alloy		Aluminum-cast, alloyed			Copper and Copper Alloys (Bronze / Brass)			Non Metallic Materials		Heat Resistant Super Alloys					Titanium Alloys		Hardened steel		Chilled Cast Iron	Hardened Cast Iron
VDI 3323	21	22	23	24	25	26	27	28	29	30	31	32	33	34	35	36	37	38	39	40	41
HRc											15	30	25	38	34			55	60	42	55
HB	60	100	75	90	130	110	90	100			200	280	250	350	320	400Rm	1050Rm	550	630	400	550
Recommended	○	○					○				○	○	○	○	○			◎			

phone:+82-32-526-0909, www.yg1.solutions, E-mail:yg1@yg1.solutions
YG-1 CO., LTD.

Special features of SM-Point Spade Drill

This new "Hybrid Point" combines the strength of the standard point with additional "Web Thinning".

This new point increases stability, reduces thrust, improves centering and allows increased speeds and feeds.

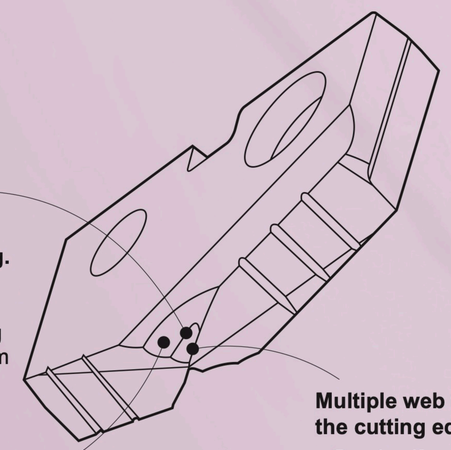

Multiple thinning form at the bottom of the large thinning.
- The optimum thinning for the difference from the cutting speed, the cutting quantity and the cutting load according to the distance from the drill point to the cutting edge.

Multiple web thinning with the cutting edge of small web thinning.
- Good self-centering
- Less tool lead off
- Reduction in bell mouthing, thrust
- Increased stability

Radius back face
- Wide chip space

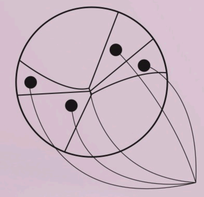
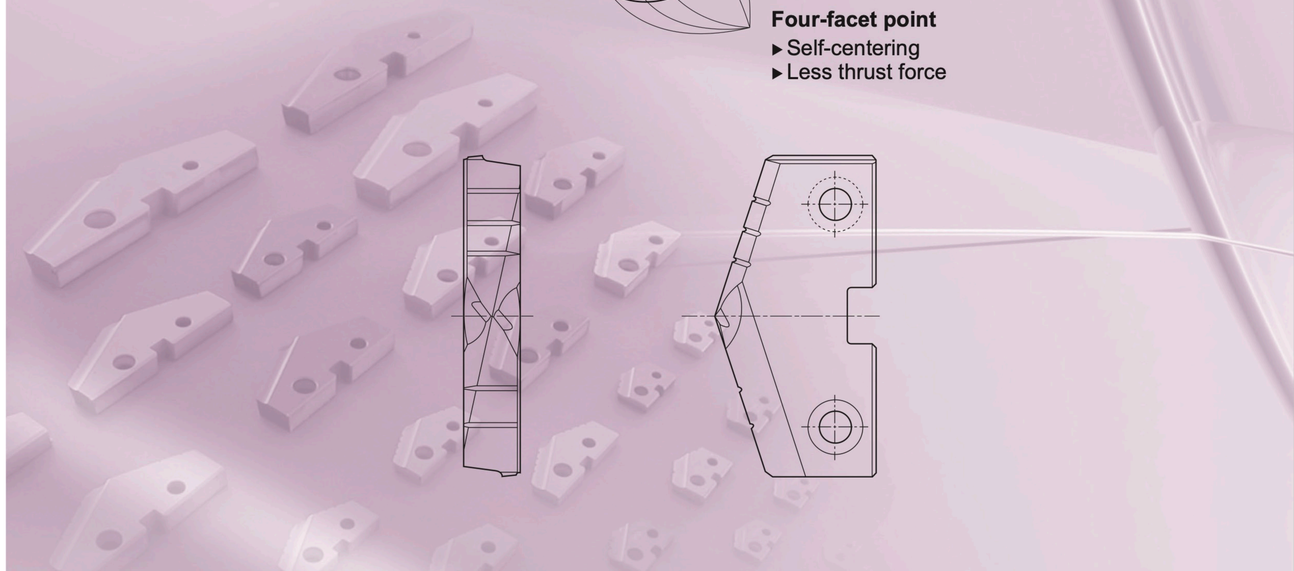
Four-facet point
- Self-centering
- Less thrust force